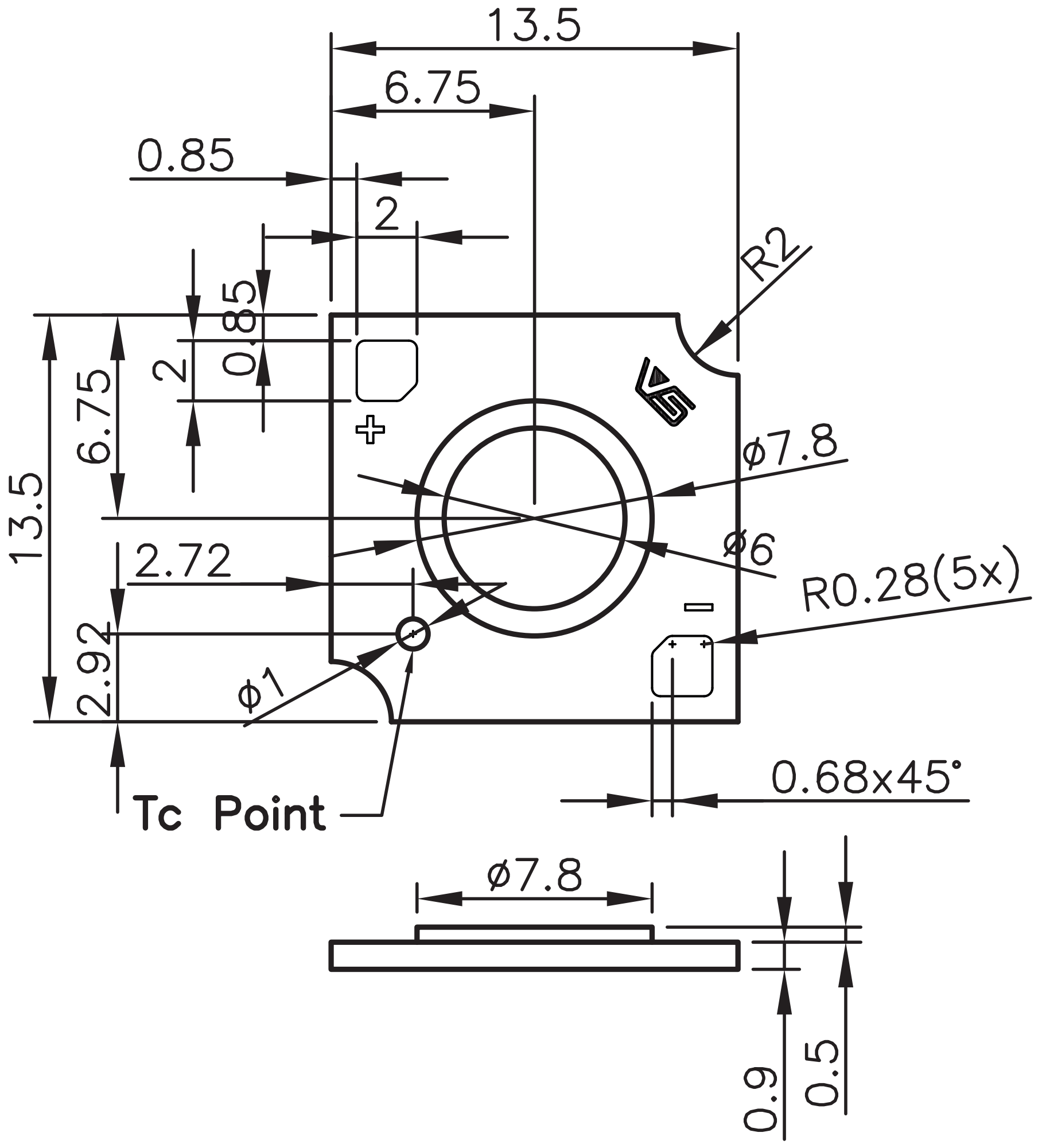
13.5
6.75
0.85
2
R2
0.85
2
6.75
13.5
ϕ7.8
ϕ6
2.72
R0.28(5x)
2.92
ϕ1
0.68x45°
Tc Point
ϕ7.8
0.9
0.5