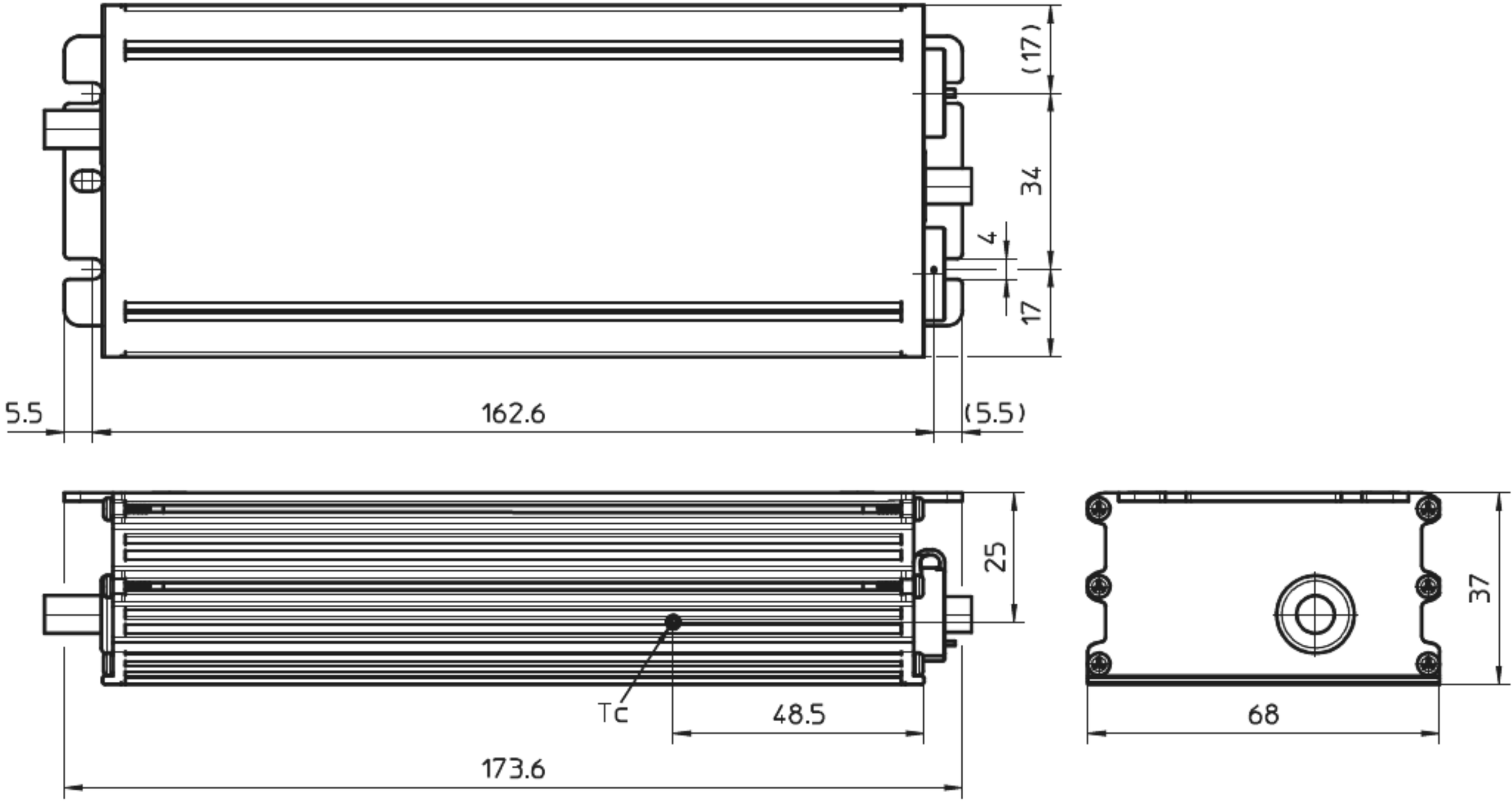
(17)
34
4
17
5.5
162.6
(5.5)
25
37
Tc
48.5
68
173.6